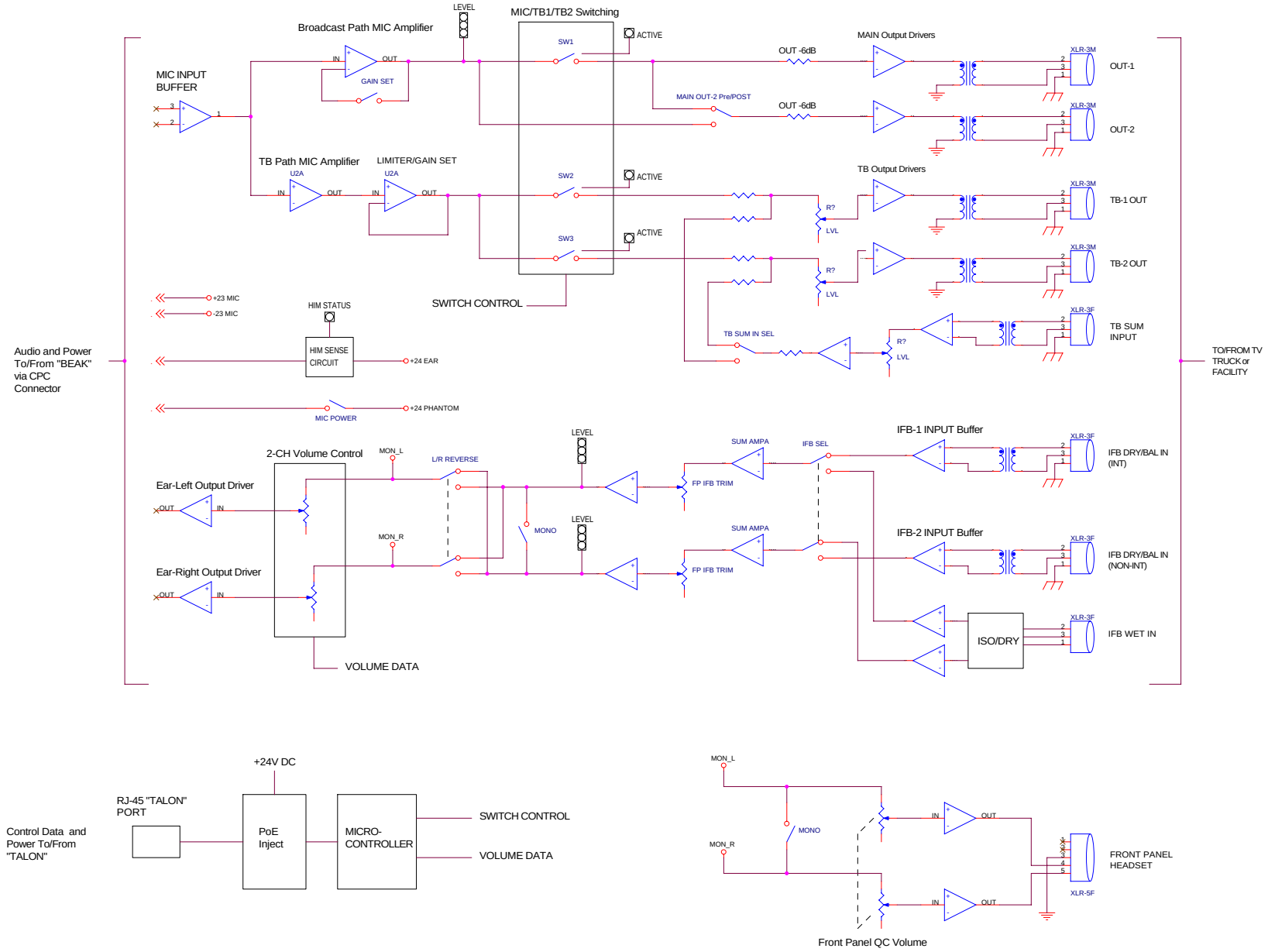

A. McHaddad 8/22/10 4/2010

Title	Eagle Master I/F Module (REV-1) Internal Block	
Size C	Document Number <Doc>	Rev 4
Date: Sunday, August 22, 2010	Sheet 1 of 1	